Installation manual | for authorised electricians
sonnenBatterie Evo

sonnen

info@sonnen.com.au

IMPORTANT

- Read this document carefully before installation / operation.
- Retain this document for reference purposes.

Publisher	
sonnen Australia Pty Ltd	
Tenancy 6, Lionsgate Business Park, 180 Phillip Highway	
Elizabeth South SA 5112, Australia	
Service number	+61 137 666
Email	info@sonnen.com.au

Document	
Document number	5000580
Version	000
Valid for	AU, NZ
Publication date	10/03/2022

Table of Contents

1 Information about this document 6

1.1 Target group of this document 6

1.2 Designations in this document 6

1.3 Symbols in this document 7

2 Safety 8

2.1 Intended use 8

2.2 Requirement for the electrician 8

2.3 Important safety instructions 9

2.4 Voltage inside the storage system 9

2.5 Prohibited uses 10

2.6 Handling the battery modules 10

2.7 Conduct in case of a fire 12

3 Product description 13

3.1 Technical data 13

3.2 System components 15

3.3 Symbols on the storage system 16

4 Storage and transport 17

4.1 Storage 17

4.1.1 Ambient conditions during storage 17

4.1.2 Storing the battery modules 17

4.2 Transport 18

4.2.1 Transporting battery modules 18

4.2.2 Inspecting for transport damage 18

4.2.3 Transport to the installation location 19

4.2.4 Temperature adjustment after transport 19

5 Scope of delivery 21

6 Mounting and electrical installation 22

6.1 Mounting ... 23
6.1.1 Selecting the installation location ... 23
6.1.2 Observing minimum clearances ... 23
6.1.3 Inspecting the storage system ... 23
6.1.4 Installing the main cabinet ... 24
6.1.5 Running external wiring into the enclosure ... 27
6.1.6 Secure enclosure to location ... 28
6.2 Installing electrical and data connections ... 28
6.2.1 Connecting grid and essential load wiring ... 28
6.2.2 Connecting ethernet and modbus ... 29
6.3 Installing the battery modules ... 30
6.3.1 Overview sonnenModule 4 ... 30
6.3.2 Installing the battery modules ... 30
6.3.3 Connecting power and BMS to the battery modules ... 33
6.4 Installing the power meter ... 35
6.4.1 Components overview ... 35
6.4.2 Overview measurement methods ... 36
6.4.3 Connecting the power meter ... 37
6.4.4 Configuring the power meter ... 40
7 Operation of the system ... 43
7.1 Startup procedure ... 43
7.2 Shutdown procedure ... 43
7.3 LED indicator ... 44
7.4 Commissioning ... 44
7.4.1 Taking photos to document installation ... 44
7.4.2 Filling in the commissioning report ... 44
7.5 Commissioning Assistant 2.0 ... 45
7.5.1 Establishing connection to the storage system ... 45
7.5.2 Running the commissioning assistant ... 45

8 Maintenance 50
9 Troubleshooting 50
10 Uninstallation & Disposal 52
10.1 Uninstallation 52
10.2 Disposal 52

1 Information about this document

This document describes the installation of the sonnenBatterie Evo storage system.

- Read this document in its entirety.
- Keep this document in the vicinity of the storage system.

1.1 Target group of this document

This document is intended for authorised and certified electricians. The actions described here must only be performed by authorised and certified electricians. Definition and the criteria of authorised and certified electricians can be found in section 2.2.

1.2 Designations in this document

The following designations are used in this document:

Complete designation	Designation in this document
sonnenBatterie Evo	Storage system

1.3 Symbols in this document

⚠ DANGER	Extremely dangerous situation leading to certain death or serious injury if the safety information is not observed.
⚠ WARNING	Dangerous situation leading to potential death or serious injury if the safety information is not observed.
⚠ CAUTION	Dangerous situation leading to potential injury if the safety information is not observed.
NOTICE	Indicates actions that may cause material damage.
ℹ	Important information not associated with any risks to people or property.

Symbol	Meaning
▶	Work step
1.2.3. ...	Work steps in a defined order
✓	Condition
-	List

Table 1: Additional symbols

2 Safety

2.1 Intended use

The sonnenBatterie Evo is a battery storage system which can be used to store electrical energy. Improper use of this system poses a risk of death or injury to the user or third parties as well as damage to the product and other items of value. The following points must therefore be observed in order to comply with the intended use of the product:

- The storage system must not be installed in any kind of combination.
- The storage system must be fully installed in accordance with the installation instructions.
- The storage system must be installed by a licensed electrician who has completed the sonnen installer accreditation training. Country-specific regulations concerning electrical installations must be observed at all times.
- The storage system must only be used at a suitable installation location.
- The transport and storage conditions must be observed.

The following uses are not permissible:

- Operation in flammable environments or areas at risk of explosion.
- Operation in locations at risk of flooding.
- Operation in an outdoor location whereby the supplied IP rating of the enclosure has not remained intact.
- Operation of the battery modules outside of its storage system.

Failure to comply with the conditions of the warranty and the information specified in this document invalidates any warranty claims.

2.2 Requirement for the electrician

Improper installation can result in personal injury and/or damage to components. For this reason, the storage system must only be installed and commissioned by authorised and sonnen certified electricians.

Authorised and sonnen certified electricians must meet the following criteria:

- The electrician must be a person with a technical knowledge or sufficient experience to enable him/her to avoid dangers which electricity may create.
- The electrician must have successfully completed the sonnen Australia installer training and have valid sonnen installer accreditation at the time of installation.

2.3 Important safety instructions

- Only use the storage system in its original state.
- Do not modify the storage system.
- Do not use a damaged storage system.
- Ensure all safety devices are in perfect working condition.
- Safety devices must never be overridden, blocked or tampered with.
- The interfaces of the storage system must be wired in accordance with the product documentation.
- An appropriate and readily accessible disconnect device shall be incorporated in the fixed wiring.
- All repairs on the storage system must be performed by authorised service technicians only.
- The replacement of battery modules must be performed by authorised service technicians only. When replacing batteries, replace with the same type and number of batteries or battery modules.

2.4 Voltage inside the storage system

The storage system contains live electrical parts, which poses a risk of electrical shock. The storage system inverter also contains capacitors which carry voltage even after the storage system is switched off. Therefore:

- Switch off the storage system to electrically isolate it before carrying out any work (see Switching the storage system off to electrically isolate it (see section 7.2).

Only then can the storage system be opened.

Even if the utility grid fails, the storage system will continue delivering power. Before servicing the storage system:

- Turn off the storage system.

DANGER Danger to life due to electric shock.

2.5 Prohibited uses

Do not use the storage system:

- In vehicles
- In standing water or (>90%) humidity locations
- In areas at risk of filling with combustible dust (flour dust, sawdust, etc.)
- In direct sunlight
- In locations with the air ammonia content exceeds 20 ppm
- In presence of corrosive gases
- In locations with elevations above 2,000 meters above sea-level
- In locations with ambient temperature outside -10°C - 50°C

2.6 Handling the battery modules

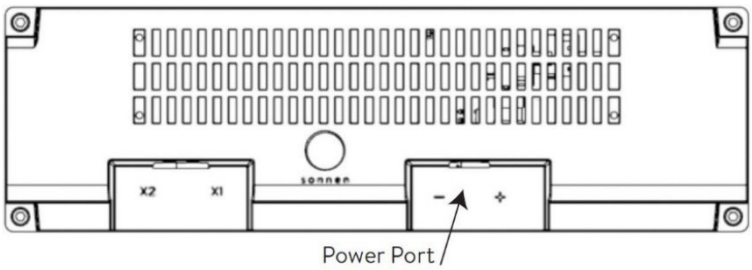

Figure 1: sonnenModule4 battery module

- The battery modules have a nominal voltage of 102.4 VDC and therefore fall into the range of protected extra-low voltage (under 120 VDC).
- The battery modules are utilising high-performance Lithium-Iron-Phosphate (LFP)
- The battery modules contain no metallic Lithium.

WARNING – RISK OF ELECTRIC SHOCK

Residual voltage is always present on DC terminals, and the battery modules cannot be turned off.

- Avoid contact with terminals.

When working on the storage system:

- Take off metallic jewellery.
- Turn off the storage system.
- Use insulated tools.
- Wear personal protective equipment, including safety glasses, insulated gloves, and safety shoes.

The battery modules installed in the storage system are protected by multiple protective devices and can be operated safely. Despite their careful design, the battery cells inside the battery modules may corrode or experience thermal runaway in the event of mechanical damage, heat or a fault.

This can have the following effects:

- High heat generation on the surface of the battery cells.
- Electrolyte may escape.
- The escaping electrolyte may ignite and cause an explosive flame.
- The smoke from burning battery modules can irritate the skin, eyes and throat.

Therefore, proceed as follows:

- Do not open the battery modules.
- Do not mechanically damage the battery modules (pierce, deform, strip down, etc.)
- Do not modify the battery modules.
- Do not allow the battery modules to come into contact with water (except when extinguishing a fire in the storage system).
- Do not heat the battery modules. Operate them only within the permissible temperature range.
- Keep the battery modules well away from sources of ignition.
- Do not short-circuit the battery modules. Do not allow them to come into contact with metal.

- Do not continue to use the battery modules after a short circuit.
- Do not deep-discharge the battery modules.

In the event that module contents are released:

- Do not enter the room under any circumstance.
- Avoid contact with the escaping electrolyte.
- Contact the fire services.

2.7 Conduct in case of a fire

Fire may occur with electrical equipment despite its careful design. Likewise, a fire in the vicinity of the equipment can cause the storage system to catch fire, releasing the contents of the battery modules.

In the event of a fire in the vicinity of the product or in the storage system itself, proceed as follows:

- Only firefighters with appropriate protective equipment (safety gloves, safety clothing, face guard, breathing protection) are permitted to enter the room where the burning storage system is located.

There is a danger of electrocution when extinguishing fire while the storage system is switched on. Therefore, before starting to extinguish the fire:

- Switch off the storage system to electrically isolate it.
- Switch off the main switch in the building.

If the storage system and/or main switch cannot be safely switched off:

- Observe the minimum distances specified for the extinguishing agent used. The storage system works with an output voltage of 230 V (AC) and is therefore considered a low-voltage system.
  - A storage system fire can be extinguished using conventional extinguishing agents.
  - Water is recommended as an extinguishing agent in order to cool the battery modules and therefore, prevent thermal runaway in battery modules which are still intact.

3 Product description

3.1 Technical data

sonnenBatterie Evo	
System specifications (AC)	
Nominal voltage	230 V
Nominal frequency	50 Hz
Nominal power rating (@ 40 °C)	5000 W
Rated current	22 A
Rated active power	5000 W
Rated apparent power	5000 VA
Max. current (continuous)	22 A
Charge/ discharge power	5000 W
Power factor range	0.5 leading ... 0.5 lagging
Short circuit current	454A @ 12.13ms
Mains connection	Single-phase, L / N / PE
Mains topology	TN / TT
Grid integration	AC coupled
Inverter topology	Transformerless
Active anti-islanding method	Integrated
Battery specifications (DC)	
Nominal voltage	102.4 VDC
Battery voltage range	160...230 VDC
Operating voltage	204.8 VDC
No. of battery modules	2
Nominal capacity	11 kWh
Usable capacity (@ 90% DoD)	10 kWh
Max charge/ discharge current (continuous)	40 A
Max charge/ discharge power	5000 W
Short circuit current	2880 A
Cell chemistry	Lithium Iron Phosphate (LiFePO4)
Over-current protection	Fuse protection
General data	
Dimensions in mm (W x H x D)	710mm x 1400mm x 427mm
Weight (approximate)	165 kg
Ambient temperature range	-5 °C to 45 °C 5 °C to 35 °C (Max power)
Total harmonic distortion	<5%
Inverter efficiency	94.4% peak
On-grid pass-through	35 A
Applications	Time-of-use Self-consumption Backup
System cooling	Forced-air cooling
Communication	Ethernet
Warranty	10 years or 10,000 cycles

Safety

Protection class	I / PE conductor
Overvoltage category	III
Degree of protection	IP 56
Rated short-withstand current (ICW)	1.5 kA

Ambient conditions

Environment	Outdoor
Storage temperature range	0 °C ... 40 °C
Transport temperature range	-15 °C ... 50 °C
Max. rel. humidity	90 %, non-condensing
Permissible installation altitude	2,000 m above sea level
Pollution degree	3

Backup specification

Nominal backup current (Continuous)	22 A
Nominal output voltage	230 V
Nominal power	5000 W
Nominal frequency	50 Hz
Max backup power (Max 30mins)	5300 VA
Max backup power (Max 60s)	7050 VA
Max backup power (Max 300ms)	7600 VA
Maximum compatible PV inverter	6 kW

Certifications

Grid connections	AS/NZS 4777.2:2020
EMC / EMI protection	EN 61000-6-1, EN 61000-6-3, IEC 62040-2
Safety	IEC 62040-1, IEC 62477-1, IEC 62619, IEC 62109-1, IEC 62109-2

Additional ambient conditions:

- The installation location must not be at risk of flooding.
- Installation room should be ventilated.
- All applicable building codes must be observed.
- Even floor, suitable for heavy loads.
- Observe fire control standards.
- Free from corrosive and explosive gases (ammonia content max. 20 ppm).
- Free from dust (especially flour dust or sawdust).
- Free from vibrations.
- Free access to the installation location.
- If possible, no direct sunlight.

3.2 System components

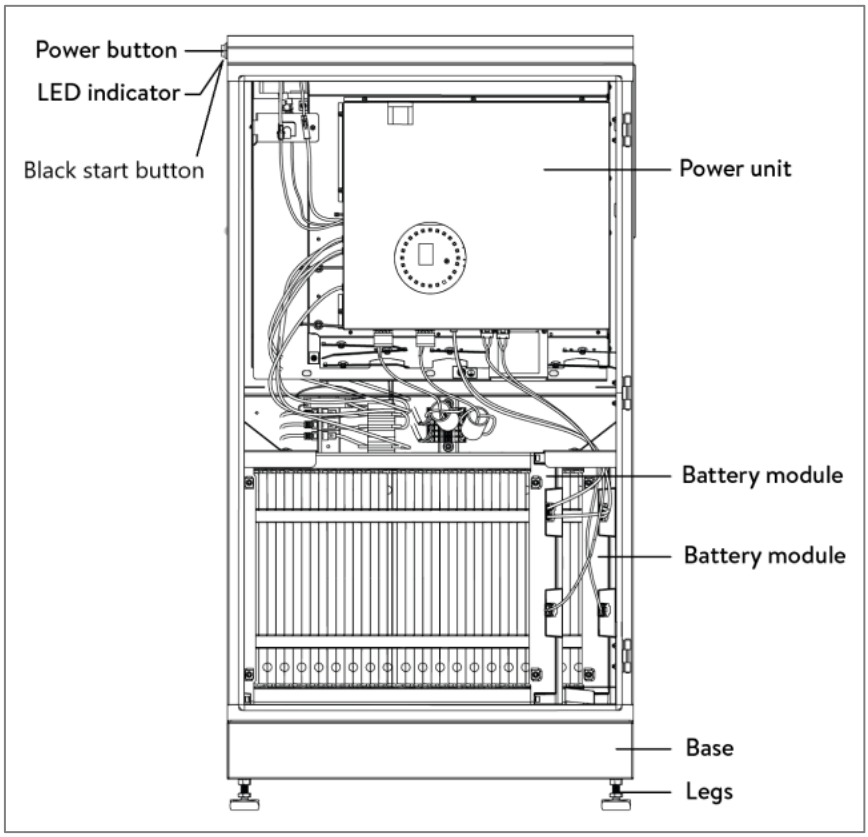

Figure 2: Overview system components

Item	Description	Function
1	Power Unit	Contains the inverter and the control unit
2	Battery Module	Stores energy
3	Base	Contains the air filter
4	Legs	Provide elevation and compensation for uneven grounds
5	Power Button	System startup and shutdown
6	Black Start Button	System startup in offgrid condition
7	LED Indicator	Indication of the state of operation

3.3 Symbols on the storage system

Symbol	Description
	Warning: flammable materials.
	Warning: hazards due to batteries.
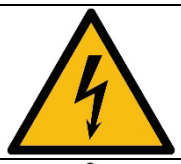	Warning: electrical voltage.
	Warning: electrical voltage. Wait five minutes after switching off (capacitors de-energising time).
	Warning: equipment with multiple sources of supply (PV generator, AC mains and battery).
	Warning: product is heavy.
	CE mark. The product meets the requirements of the applicable EU directives.
	RCM Mark for Australia and New Zealand.
	WEEE mark. The product must not be disposed of in household waste; dispose of it through environmentally friendly collection centres.
	Observe the documentation. The documentation contains safety information.

4 Storage and transport

4.1 Storage

Storage describes the condition when the storage system is not connected to the public electrical mains and the battery modules cannot be automatically charged.

4.1.1 Ambient conditions during storage

While not in use, the system and battery modules must be stored under the following conditions:

- Ambient storage temperature of battery modules (<6 months) 0 °C – 40 °C
- Ambient storage temperature of Inverter 0 °C – 40 °C
- Humidity max. 90% (non-condensing)
- Properly ventilated
- Maximum elevation of 2,000 meters above sea level
- Fire safety regulations observed
- Free of dust
- Free of corrosive and explosive gases
- Free of vibrations
- Plain surface that can bear heavy weights
- Location meets local building codes

4.1.2 Storing the battery modules

NOTICE

Deep-discharge of the battery modules

Damage to the battery modules!

- Do not disconnect the storage system from the public grid for long periods of time.
- Never continue to operate battery modules which have been deep-discharged.

During storage, the battery modules automatically discharge at a minimal level. Deep-discharge could damage or destroy the battery modules. For this reason, the battery modules can only be stored for a limited amount of time.

Observe the following points:

- The battery modules must be charged to **at least 30%** before storing them.

- Store the battery modules **for no longer than 6 months**.
- After six months, battery modules require charging. Contact service for guidance.

4.2 Transport

Lithium-ion battery modules are hazardous materials. Therefore, the following points must be observed when transporting the battery modules:

- Observe the general transport regulations based on the mode of transport as well as all legal regulations.
  - Transportation temperature range (<3 months) -20°C - 60°C
- Consult an external expert for hazardous materials.

  The following data is relevant for transport:

  - Hazardous material: Class 9
  - UN number: UN3480 “lithium-ion battery modules”
  - Weight of a battery module: 40 kg

4.2.1 Transporting battery modules

⚠ CAUTION

Improper transport of battery modules

Fire outbreak at battery modules or emission of toxic substances!

- Transport the battery modules in their original packaging only. If you no longer have the original packaging, new packaging can be requested from sonnen Australia.
- Never transport damaged battery modules.

4.2.2 Inspecting for transport damage

⚠ CAUTION

Use of damaged battery modules

Fire outbreak at battery modules or emission of toxic substances!

- Unpack the battery modules immediately after transport and inspect them for transport damage.
- Do not use the battery modules under any circumstance.
- Notify the service team.

⚠ CAUTION

Insulation fault when storage system is damaged

Danger of electric shock when touching damaged insulation elements!

- Unpack the storage system immediately after transport and inspect it for transport damage.
- Do not use a damaged storage system under any circumstance.

4.2.3 Transport to the installation location

⚠ WARNING

High weight of the storage system

Risk of injury by lifting/dropping the storage system!

- Wear safety footwear when setting up.
- Ensure a secure footing.
- At least two people are necessary to carry the main cabinet of the storage system.

4.2.4 Temperature adjustment after transport

NOTICE

Forming of condensation

Damage to the storage system!

- Check the inside of the storage system for condensation before installation.
- Only install the storage system if there is no condensation on the surfaces.

If the temperature of the storage system is lower than the ambient temperature of the room when it is delivered, condensation may form inside the storage system.

If the storage system has been transported in sub-zero temperatures, proceed as follows:

1. Set up the storage system in a suitable location.

2. Open all main cabinet doors.
3. Leave the storage system to stand for at least 24 hours with open main cabinet doors.
4. Only then can you commission the storage system.

5 Scope of delivery

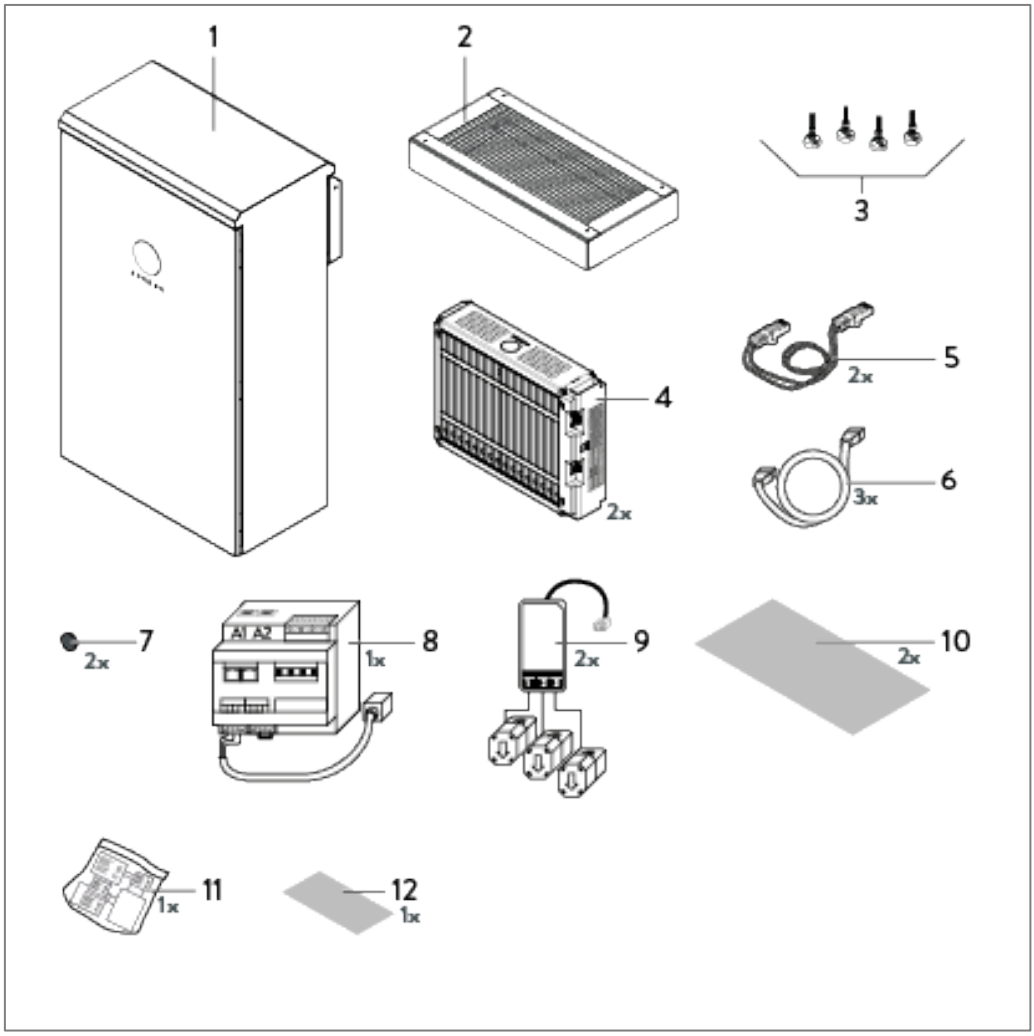

Figure 3: Scope of delivery

Check the following scope of delivery to ensure it is complete.

Item	Description	Quantity
1	Main cabinet assembly	1x
2	Base	1x
3	Feet	4x
4	sonnenModule 4	2x
5	Battery DC power cable	2x
6	BMS communication cable	3x
7	Battery rubber spacers	2x
8	sonnen power meter	1x
9	Current transformer	2x
10	Filter mat (base)	2x
11	Label kit	1x
12	Narrow outlet filter	1x

6 Mounting and electrical installation

⚠ DANGER

Electrical work on the storage system and electrical distributor

- Danger to life due to electrocution!
- Switch off the storage system to electrically isolate it.
- Disconnect the relevant electrical circuits.
- Secure against anyone switching on the device again.
- Wait five minutes so the capacitors can discharge.
- Check that the device is disconnected from the power supply.
- Only licensed electricians are permitted to carry out electrical work.

⚠ DANGER

Working on the electrical distributor

Touch voltage in the event of fault

Danger to life due to electrocution!

NOTICE

Observe maximum line lengths

The communication lines connected to the storage system (mains line, Ethernet line, other data lines) are NOT allowed to exceed a maximum length of 50 meters.

NOTICE

RCD protection

If the local regulation requires an external RCD protection, a type A or B RCD 30mA can be used. For applications, where an external PV inverter is installed in the backup path, a 100mA rated RCD is recommended. In addition, the installation of the system must comply with all relevant Australian standards including AS/NZS 3000, AS/NZS 4777.1, AS/NZS 5033 and AS/NZS 5139.

6.1 Mounting

6.1.1 Selecting the installation location

- Observe the required ambient conditions (see section 3.1 Technical data).
- The installation location must be in accordance with AS 5139

6.1.2 Observing minimum clearances

- Observe the specified minimum distances to neighbouring objects that are not part of the installation as per the illustration below:

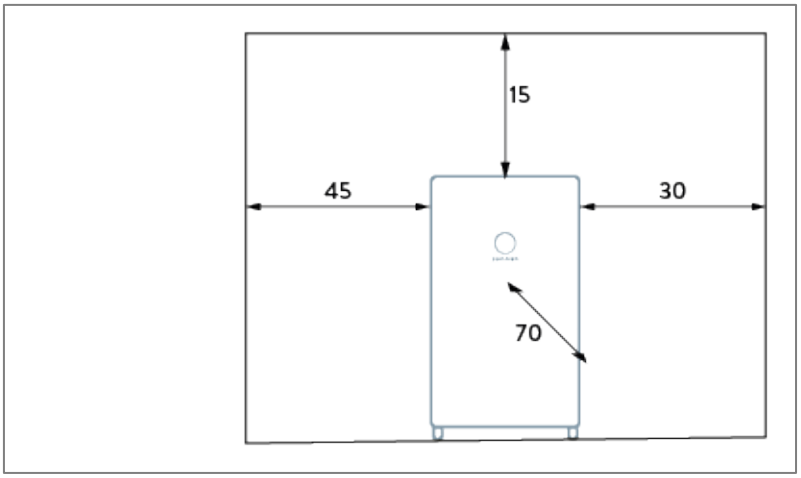

Figure 4: Minimum clearances (cm)

The minimum distances ensure that:

- there is sufficient heat dissipation,
- the storage system door can be opened easily and
- there is sufficient space for maintenance work.

6.1.3 Inspecting the storage system

If there is any suspected damage or loose parts, stop installation, photograph the affected area, and contact sonnen Australia service department.

NOTICE

sonnen support team
Phone: +61 137 666
Email: service@sonnen.com.au

6.1.4 Installing the main cabinet

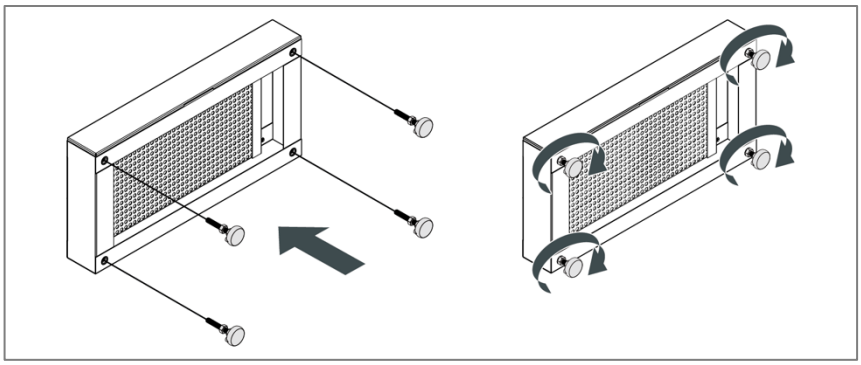

Figure 5: Base & feet assembly

1. Unpack the base & screw the feet provided into the base
2. Position the base in the desired location and level it out

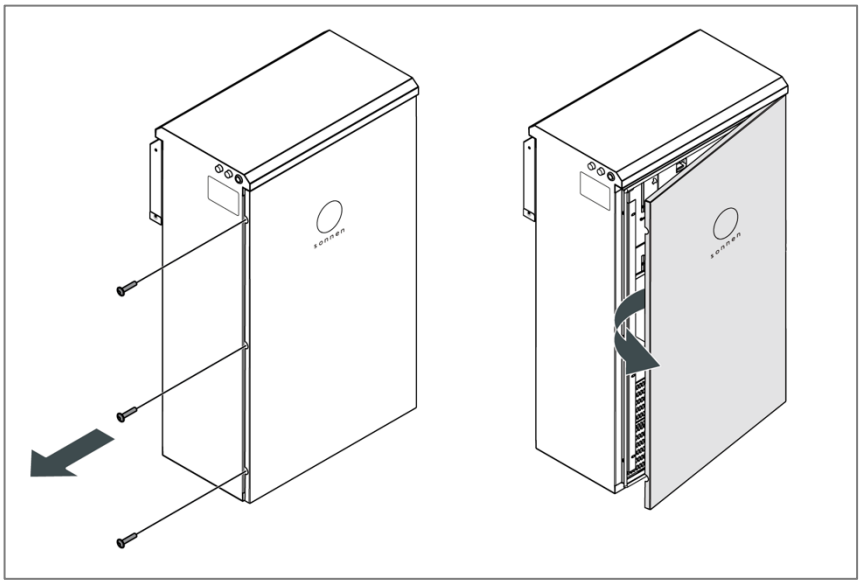

Figure 6: Opening enclosure door

3. Unpack the main cabinet & open the door by removing the screws

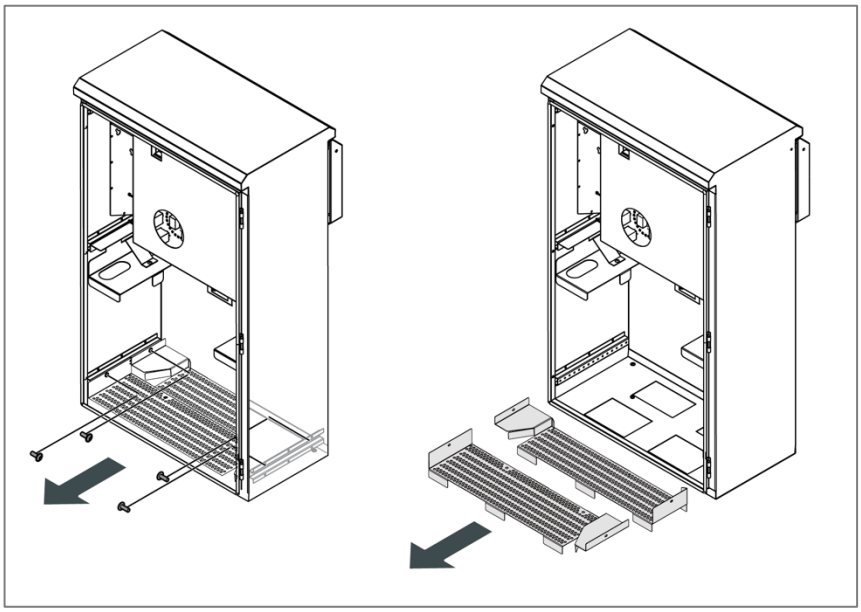

Figure 7: Removing battery trays

4. Remove the battery trays at the bottom by removing the screws

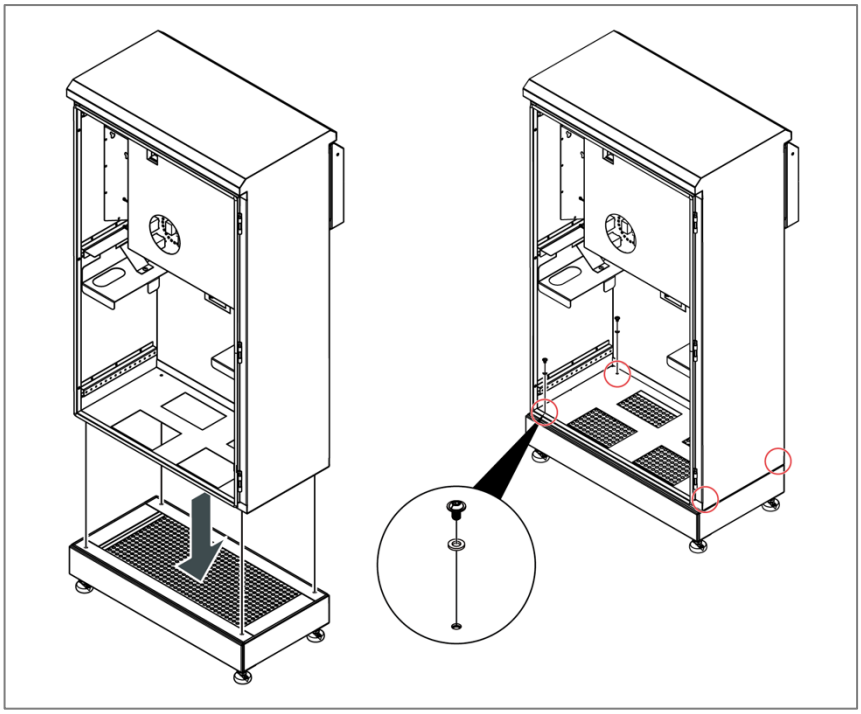

Figure 8: Main cabinet & base assembly

5. Lift and position the cabinet on the base aligning with the four screw holes
6. Fix the cabinet to the base using the four supplied screws and the earth washers
7. Ensure the earth washers have perforated the powder coating to create an earth bond

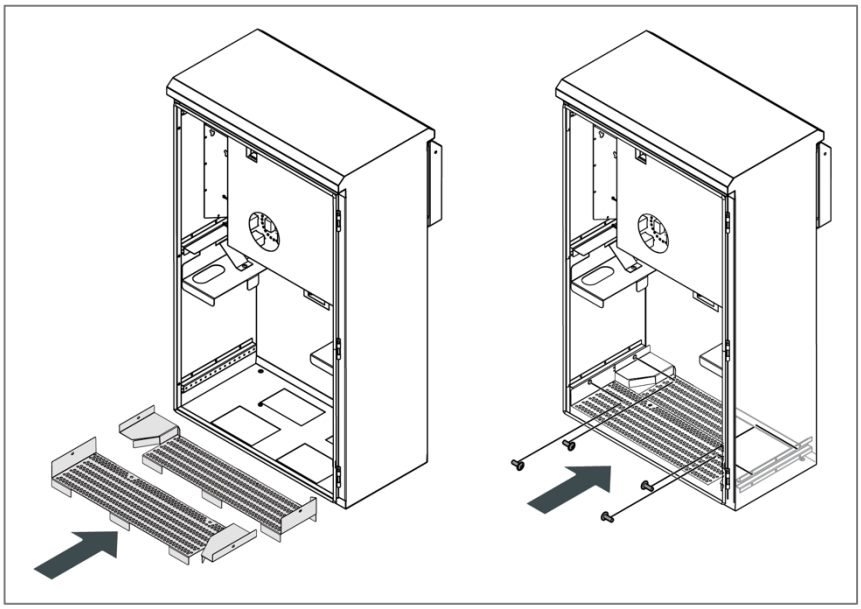

Figure 9: Installing battery trays

8. Install the previously removed bottom trays and secure in position
9. Measure the earth resistance between the main cabinet and the base
10. Once the external connections are made, move the cabinet into its final position

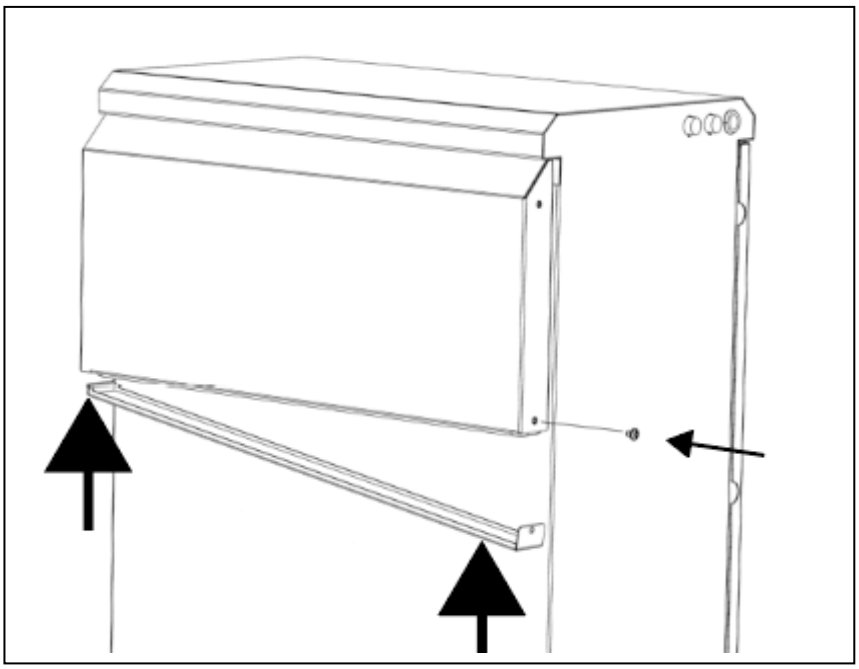

Figure 10: Replacing hood vent filter

11. Unscrew and slide out the hood vent to replace the filter
12. Once filter is replaced, slide the hood vent back into place
13. Reinsert screw and tighten

6.1.5 Running external wiring into the enclosure

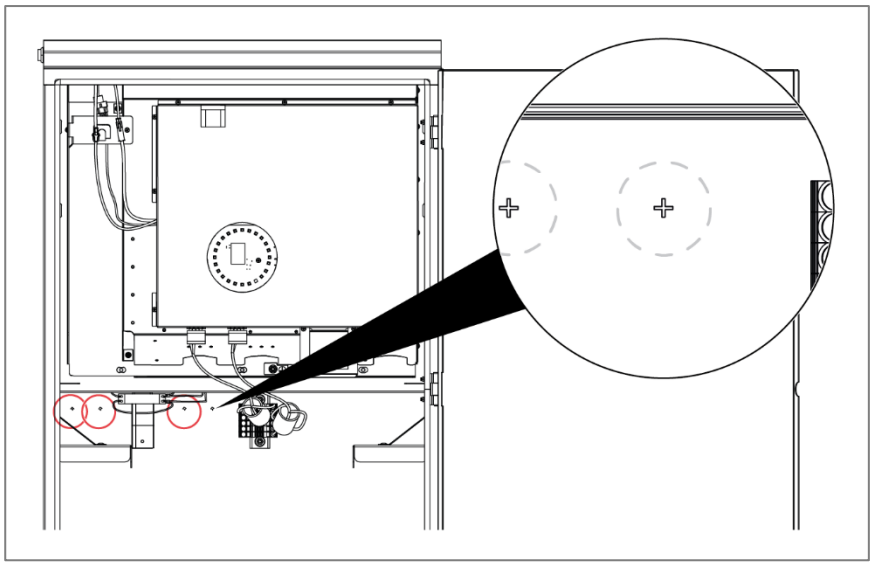

Figure 10: Drilling marks

- Use the drilling markings on the enclosure to drill the required cable entry holes.
- Bring external cables into the enclosure.
  - Grid supply
  - Backup supply
  - Modbus
  - Ethernet
- Secure cable entry holes with appropriate cable glands to seal the entry holes in accordance with AS/NZS 3000.

NOTICE	The AC WAGO terminal accepts copper only sizes up to 16 mm^2 (6 AWG) The PE WAGO terminal accepts copper only sizes up to 16 mm^2 (6 AWG)

⚠ WARNING	Touch current over limit 3.5 mA when earth fault condition present.

6.1.6 Secure enclosure to location

- Enclosure feet can be drilled out and use anchor bolts to secure the enclosure to the ground.
- Use anchor points on the enclosure to secure the enclosure to a wall.

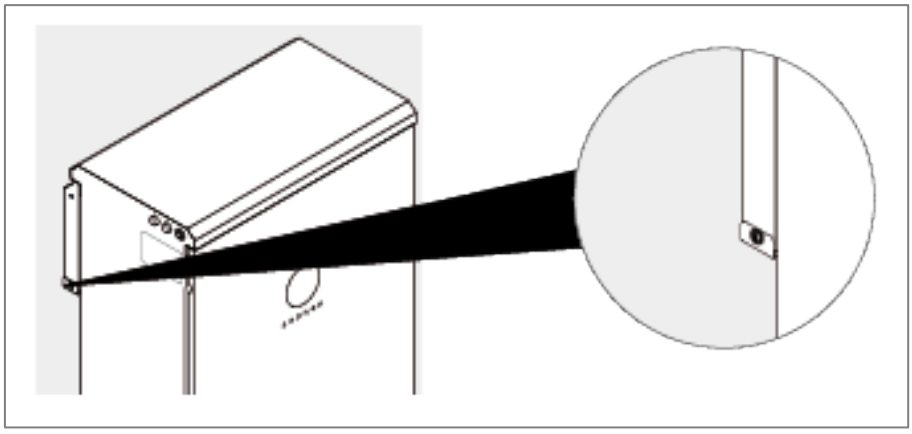

Figure 11: Enclosure anchor point

⚠ WARNING Do not drill into the main enclosure for anchor locations, metal filings may cause irreparable damage to the storage system.

6.2 Installing electrical and data connections

6.2.1 Connecting grid and essential load wiring

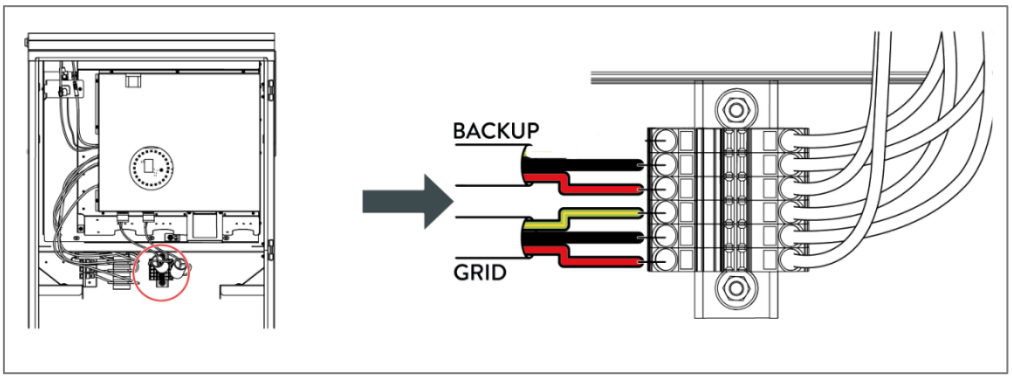

Figure 12: Grid & backup wire connection

1. Strip the L, N and PE cables 8-10mm of the grid and backup wires accordingly
2. Connect the grid and backup supply wires into the corresponding WAGO terminals at the back of the enclosure.

3. Please keep the cable length between the entry holes and WAGO terminals as short as possible.
4. Finally, pull the wires to ensure a secure connection.

NOTICE

Mechanical protection for the cables

In normal grid operation, the cable on the grid-interactive port is feeding the inverter and the essential load circuits and must therefore be adequately protected.

NOTICE

Neutral continuity

The continuity of the grid and backup neutral is maintained internally at all times.

NOTICE

PE requirements

Once the PE line of the grid supply has been grounded, the power unit including the enclosure will be grounded.

6.2.2 Connecting ethernet and modbus

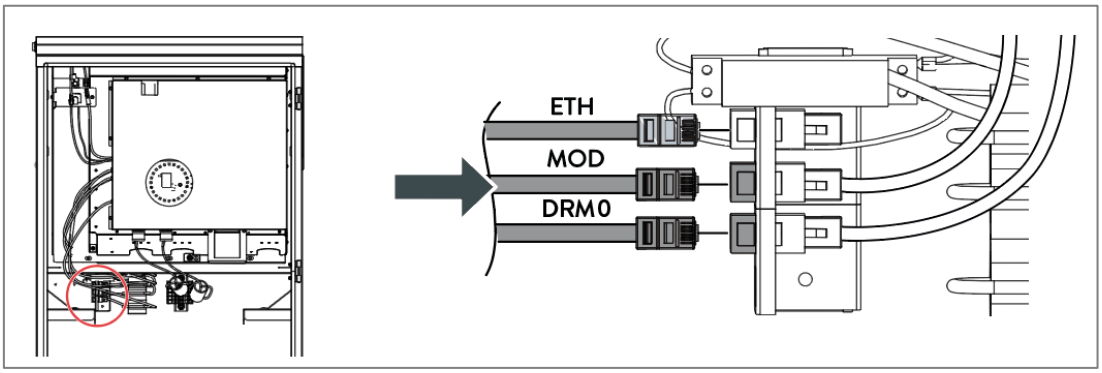

Figure 13: Ethernet & modbus connection

1. Connect the ethernet and modbus cables to their corresponding terminals at the back of the enclosure.
2. Use a shielded cable type for the ethernet and modbus connections.

NOTICE Patch lead test

We recommend doing a patch lead test before making the connection to ensure a reliable communication.

6.3 Installing the battery modules

6.3.1 Overview sonnenModule 4

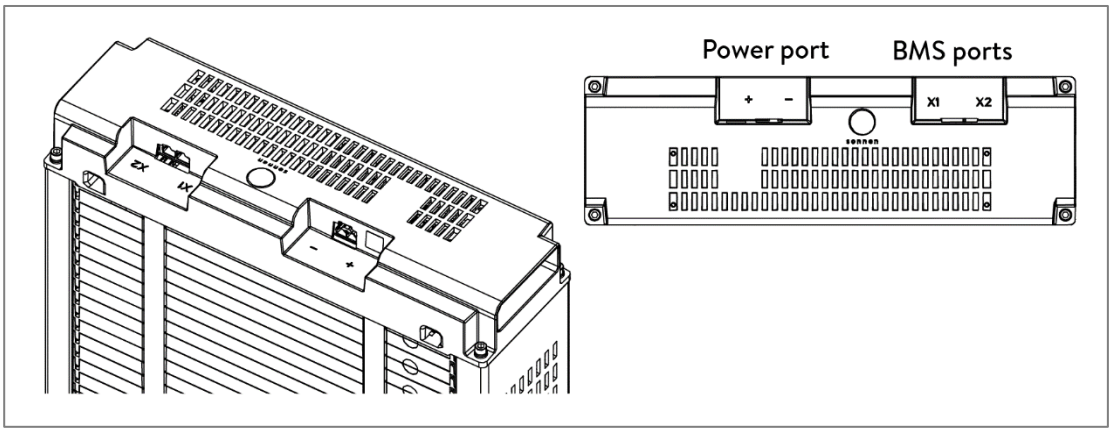

Figure 14: sonnenModule 4 overview

- X1 and X2 ports are used to connect battery modules together for communication.
- Power port - Used for power cable connections.

6.3.2 Installing the battery modules

⚠ WARNING The battery modules voltage must be within 3V range. Contact service in case a higher voltage discrepancy has been observed.

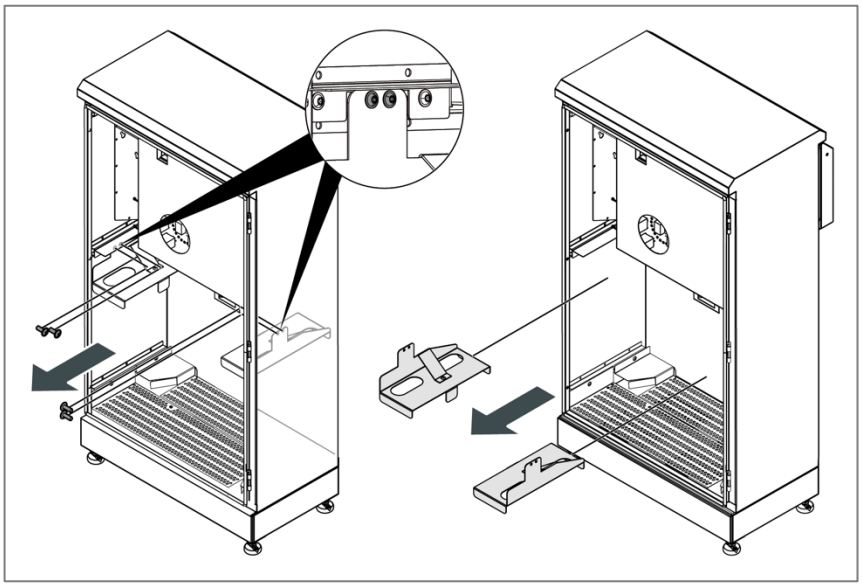

Figure 15: Removing top brackets

1. Remove the top module brackets by removing the screws on each bracket.

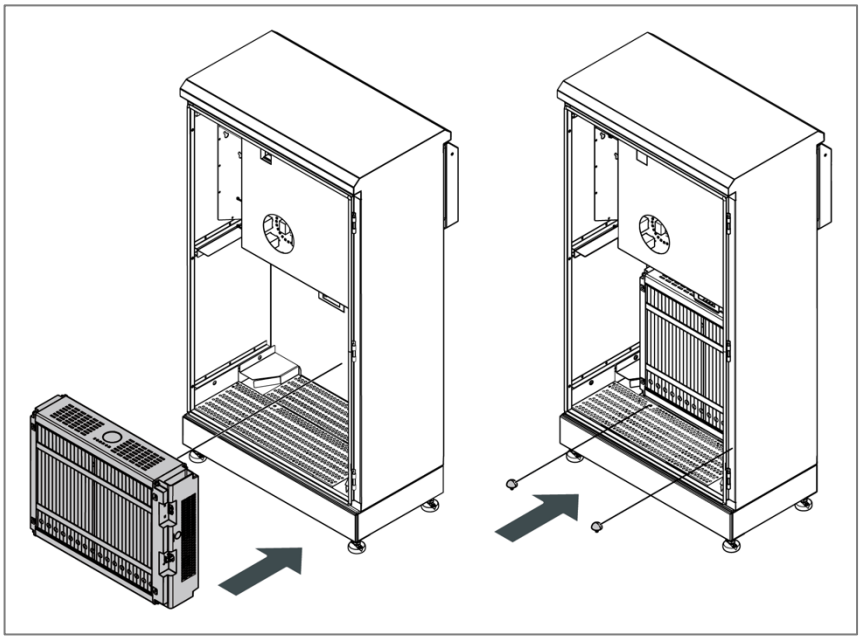

Figure 16: Installing first battery module

2. Place the first battery module at the back with connection terminals to the right and front facing, and secure with the rubber stoppers provided.

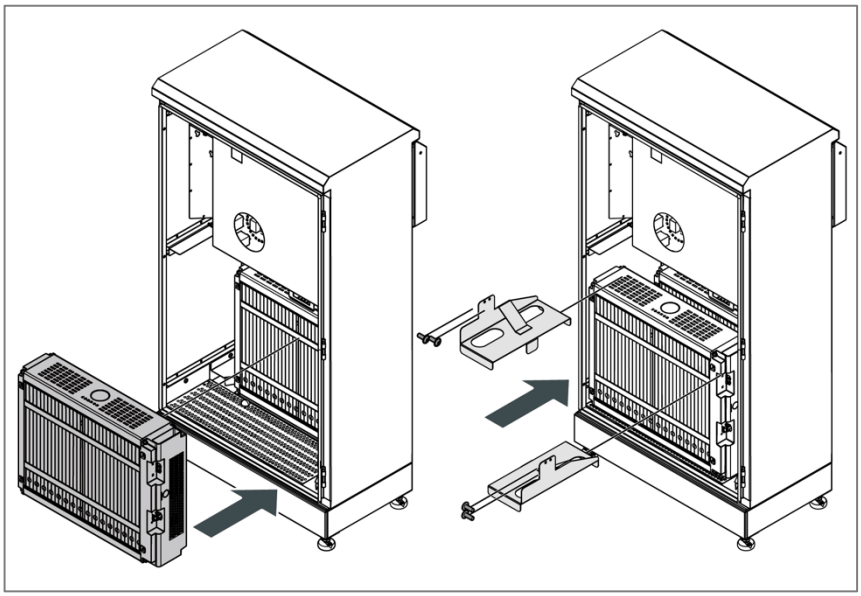

Figure 17: Installing last battery module

3. Place the second battery module in the remaining space and secure both modules using the top brackets.

6.3.3 Connecting power and BMS to the battery modules

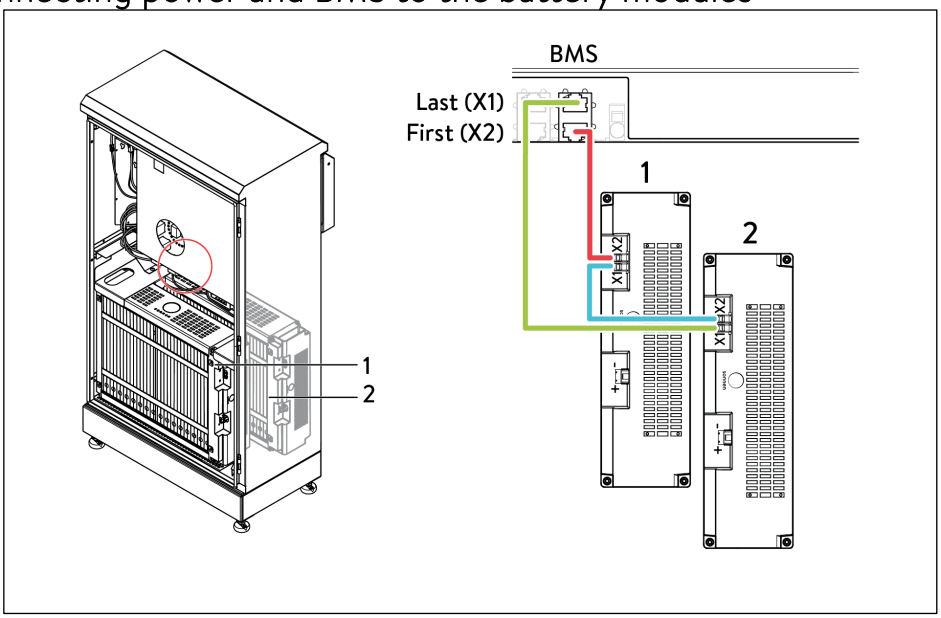

Figure 18: Connecting BMS

To make the BMS connection, please use the BMS cables provided.

1. Connect X1 (last) on the power unit to X1 terminal on the module at the back (2)
2. Connect X2 on the module at the back (2) to X1 on the module at the front (1)
3. Connect X2 on the module at the front (1) to X2 (first) on the power unit

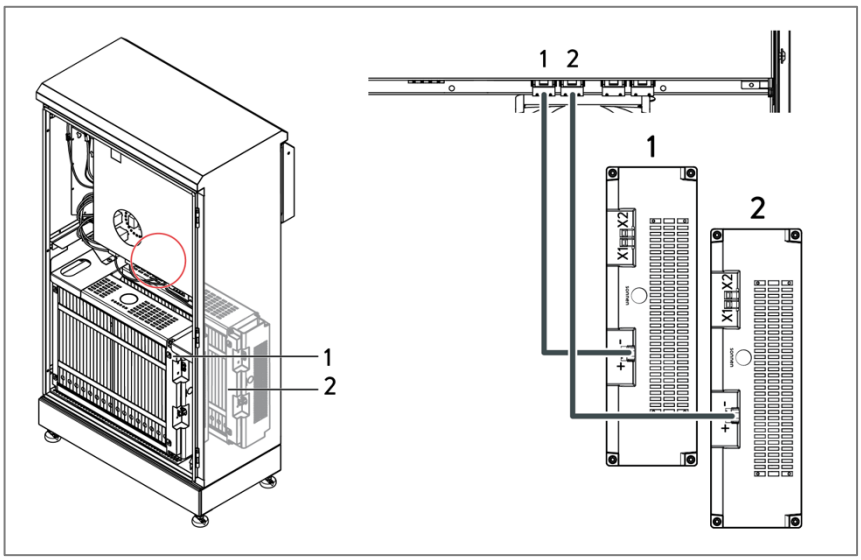

Figure 19: Connecting DC power cables

Finally, connect the DC power cables provided as per instructions below:

1. Connect the DC power cable to BATT 1 terminal on the power unit and the battery module at the front (1)

2. Connect the DC power cable to BATT (2) terminal on the power unit and the battery module at the back (2)

NOTICE

BMS connection

It is recommended to make the BMS prior to power connection.

NOTICE

DC cable connection

When connecting the DC power cables, it is important to make the connection at the power unit first before plugging into the battery module!

The battery modules are always energised!

6.4 Installing the power meter

6.4.1 Components overview

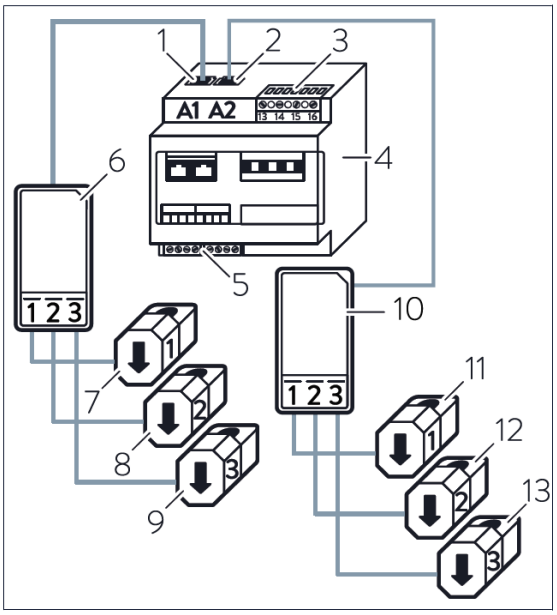

Figure 20: Overview sonnen meter components

1. A1 – input for production
2. A2 – input for consumption
3. Terminal for voltage reference
4. Power meter
5. Modbus terminal
6. Transformer interface for production
7. CT1 for production
8. CT2 for production
9. CT3 for production
10. Transformer interface for consumption
11. CT1 for consumption
12. CT2 for consumption
13. CT3 for consumption

6.4.2 Overview measurement methods

The following diagrams show the consumption and grid measurement concepts.

Consumption Measurement

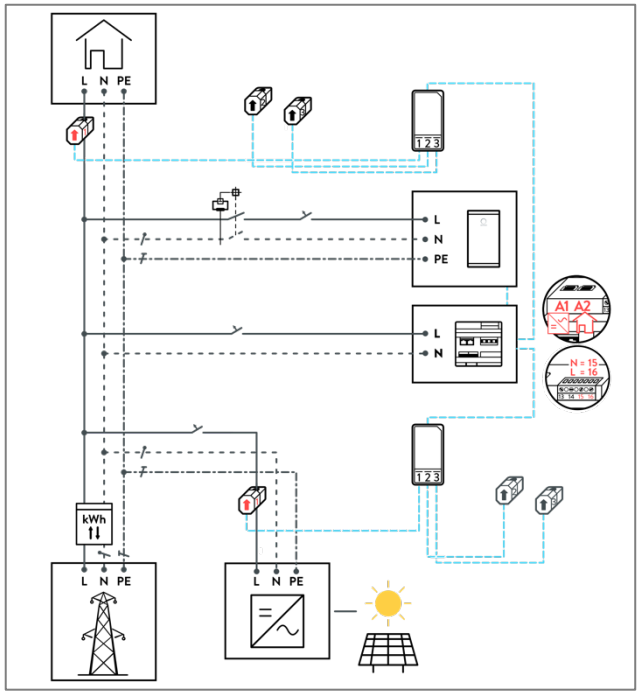

Figure 21: Consumption measurement

Grid Measurement

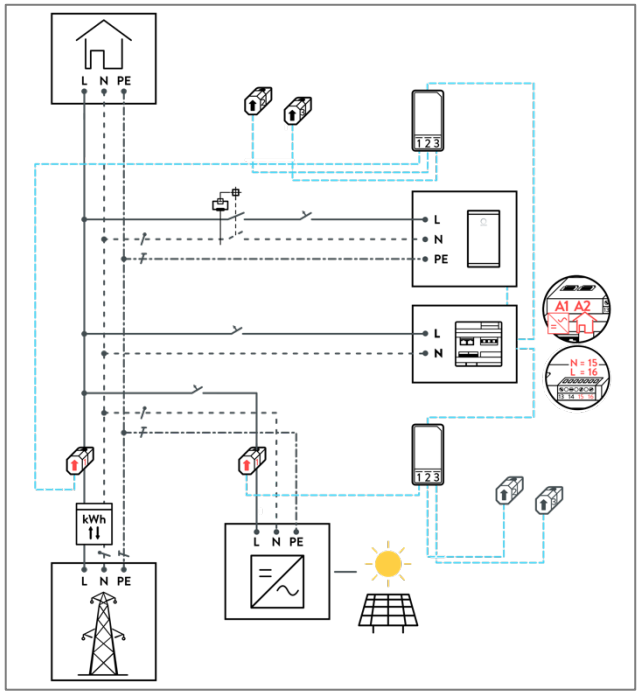

Figure 22: Grid measurement

6.4.3 Connecting the power meter

The following points must be observed when connecting power meter:

NOTICE The voltage reference terminal must be protected by a suitable circuit breaker. A 6A MCB is recommended.

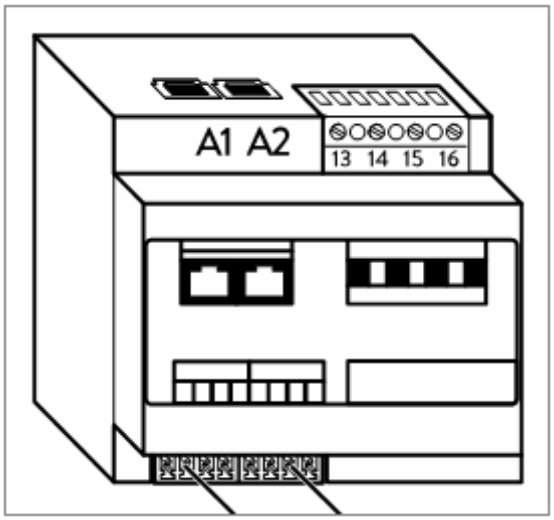

Figure 23: Power meter CT connection - Production (A1) & Consumption (A2)

- Connect the CTs for production into A1 terminal and CTs for consumption into A2 terminal on top left of the power meter.

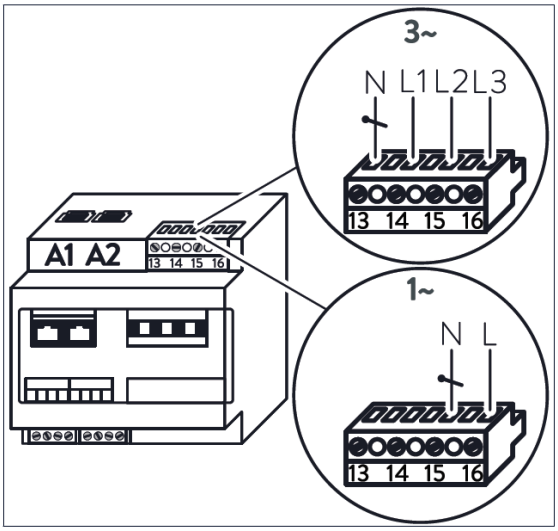

Figure 24: Connection to the voltage terminal strip at single-phase (1~) and three phase (3~) mains

When wiring the voltage terminal strip, pay attention to the correct sequence of the phases as shown in the figure on the left. The connection to the voltage terminal strip depends on the number of phases. In the case of a single-phase (1~) mains, the voltage terminal strip must be wired like it is shown on the bottom part of the figure on the left. In case of a three-phase (3~) mains wire as shown on the top part of the figure.

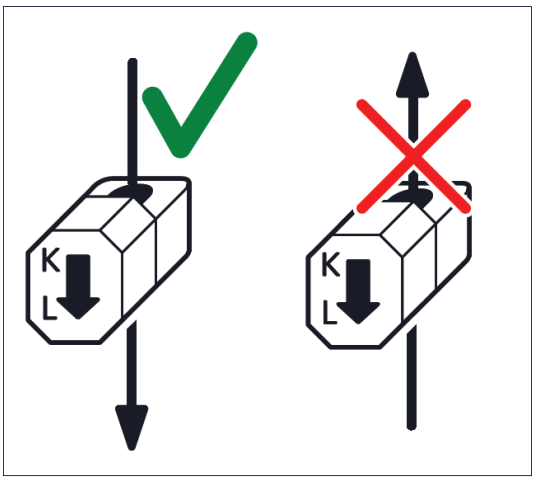

The clamp-on current transformers are clamped around the corresponding lines. The energy flow direction of the clamp-on current transformer must be observed.

The energy flow in the line must run from K to L (generation to the loads).

Figure 25: Energy flow direction vs CT direction

In the case of a one-phase PV inverter or a single-phase mains, only the clamp-on current transformer for the phase in question is connected. The other two clamp-on current transformers must not be connected.

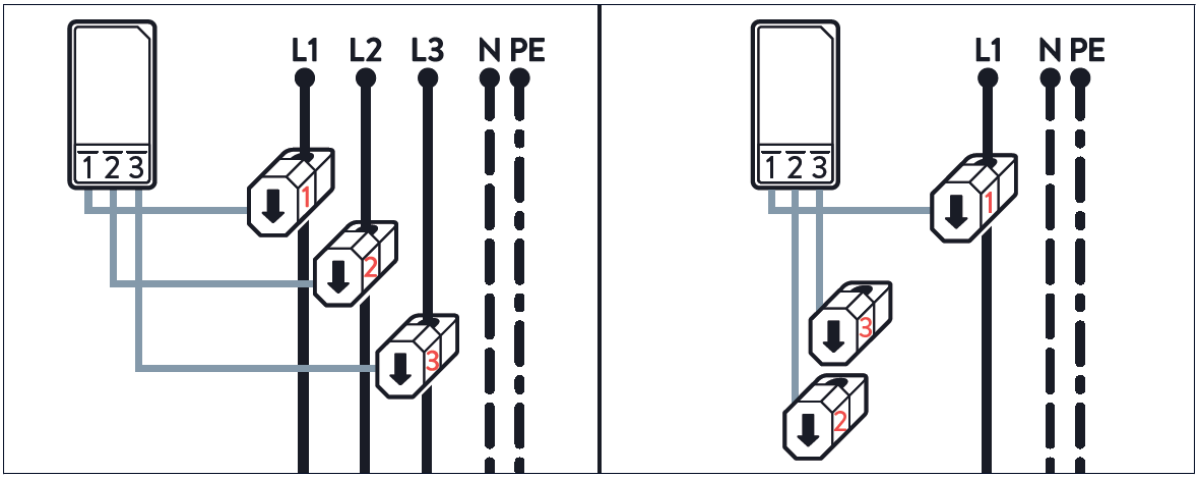

Figure 26: Connecting the clamp-on current transformers: three-phase (left) vs single-phase (right) installation

- Do not confuse the phases! Power measurement only works if the current and voltage of the same phase are measured.

Example: The clamp-on current transformer L1 (marked with number (1)) must be connected to phase L1. This phase L1 must also be connected to terminal L1 of the voltage measurement terminal strip. Only then the correct power for phase L1 can be determined.

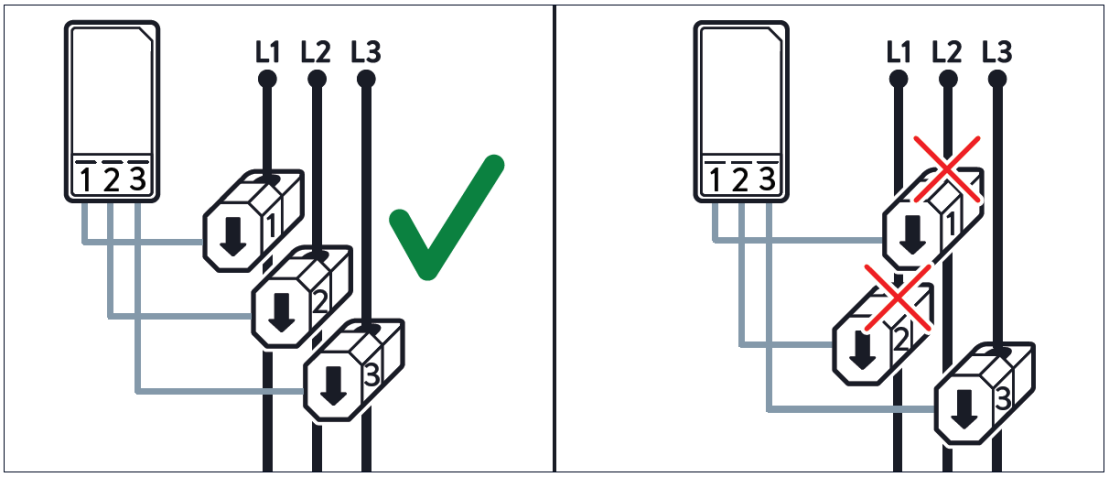

Figure 27: Connecting the clamp-on current transformers: incorrect (right) and correct (left)

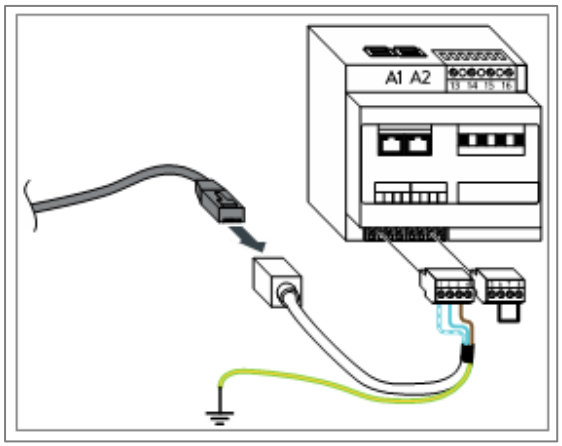

Figure 28: Power meter modbus connection

- Connect the modbus cable into the RJ45 coupler of the patch cable.
- Earth the modbus patch cable.
- Modbus cable must have the same properties as the patch cable:
  - CAT5e/CAT6 or equivalent, and shielded

6.4.4 Configuring the power meter

Tools required:

- Touch display for power meter WM271

The power meter only provides correct measured values when the right measurement mode is activated on the device. The single-phase measurement mode is the default setting. With a three-phase grid, then, the measurement mode must be switched to three-phase measurement.

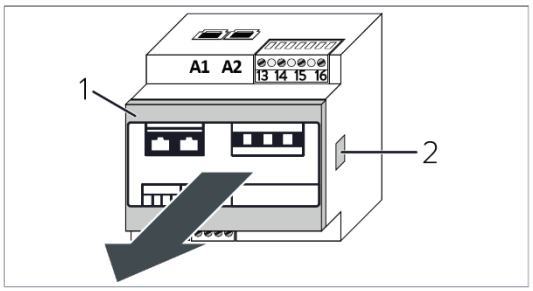

Figure 29: Removing the front cover

- Press the clips (2) on both sides of the power meter. You might use a small screwdriver.
- Remove the front cover (1).

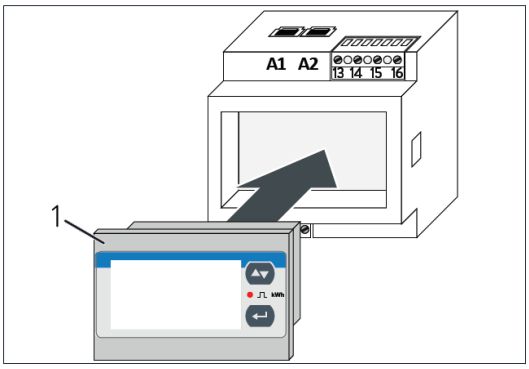

Figure 30: Inserting the touch display

- Insert the touch display (1) into the power meter.
- Supply the power meter with energy.

Figure 31: Touch display

- Press ↵ for 3 seconds.
- The PASS ? screen appears.

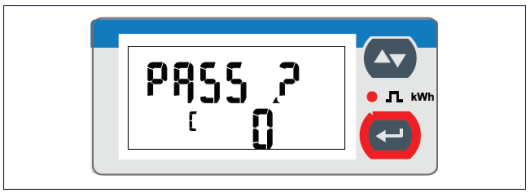

Figure 32: Password entry screen

- Press ↵ for 3 seconds.
- The CnGPASS screen appears. The power meter is now in programming mode.

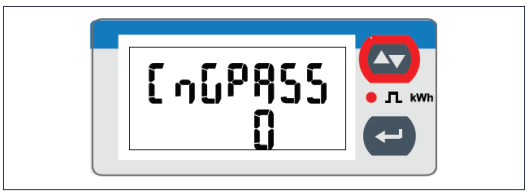

Figure 33: CnGPASS screen

- Press ▲▼ once.
- The SYS screen appears.

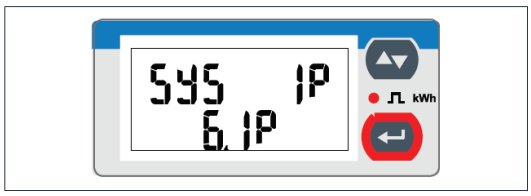

Figure 34: SYS screen

- Press ↵ once.
- Now it is possible to change the measuring mode.

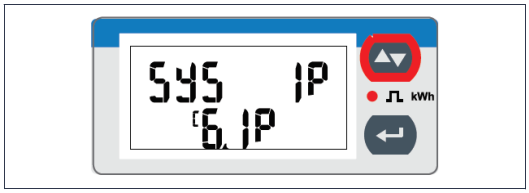

Figure 35: SYS screen - change of measuring mode

- Press ▲▼ twice until the setting 3P | 2.3P appears.

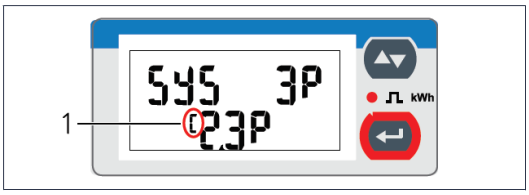

Figure 36: SYS screen - setting 3P | 2.3P

- Press ↵ for a longer period of time until the sign (1) disappears.

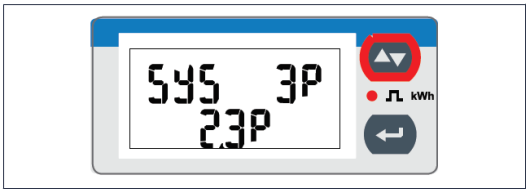

Figure 37: SYS screen after changing the measuring mode

- Press ten times.
- The end screen appears.

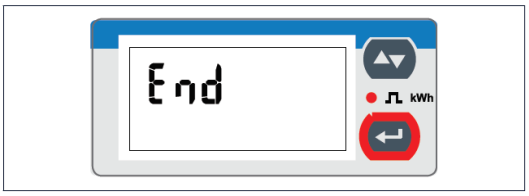

Figure 38: End screen

- Press once.

The three-phase measuring mode is now activated.

- Remove the touch display.
- Insert the front cover into the power meter.

7 Operation of the system

7.1 Startup procedure

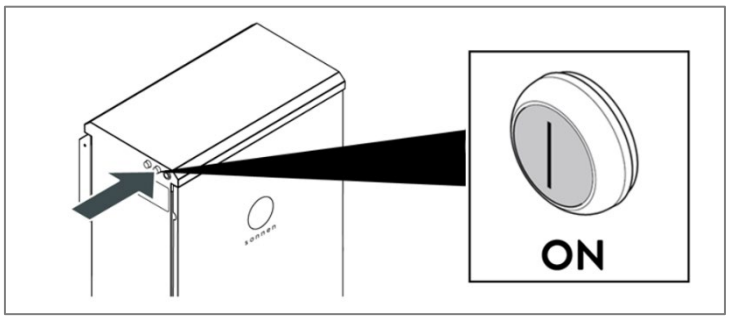

Figure 39: Startup procedure

To turn the system on, please follow the sequence below:

1. Switch on the BESS Main Switch located in the switchboard
2. Switch on the Main Switch for backup supply located in the switchboard or dedicated subboard
3. Switch on the BESS AC isolator adjacent to the system (if available)
4. Switch on the BESS Backup isolator adjacent to the system (if available)
5. Switch on the BESS using the green power button located on the left side of the enclosure
   Notice: ON position is extended OUT!

7.2 Shutdown procedure

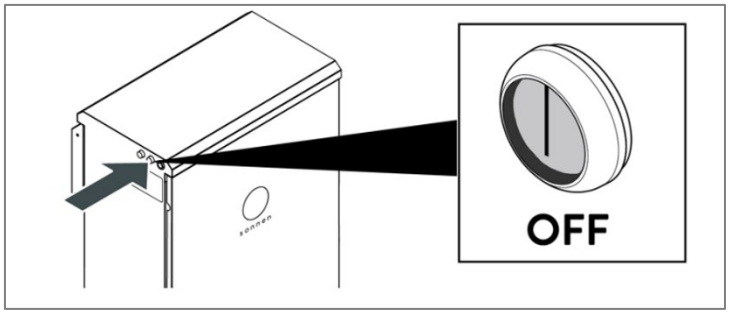

Figure 40: Shutdown procedure

To turn the system off, please follow the sequence below:

1. Switch off the BESS using the green power button located on the left side of the enclosure
   Notice: OFF position is pushed IN!
2. Switch off the BESS AC isolator adjacent to the system (if available)
3. Switch off the BESS Backup isolator adjacent to the system (if available)

4. Switch off the BESS Main Switch located in the switchboard
5. Switch off the Main Switch for backup supply located in the switchboard or dedicated subboard.

7.3 LED indicator

The LED indicator on the left side of the enclosure provides general information about the status of the system.

LED Colour	Description
White pulsating	Normal operation; System is charging/discharging/or idle
Green	No grid available; Backup supply active
Orange	No internet connection
Red	System fault; Earth fault Contact sonnen service

7.4 Commissioning

7.4.1 Taking photos to document installation

The photo upload is obligatory for both offline commissioning and online commissioning.

To fully document the installation, photos of the finished installation must be taken and sent to sonnen.

- Take the described photos of the storage system (see requirements in the appendix).
- Send the photos to: service@sonnen.com.au

7.4.2 Filling in the commissioning report

- Complete the commissioning report that can be downloaded from www.sonnen.com.au website.
- Make a copy of the filled in commissioning report, the original remains with the operator.
- Send a scan of the commissioning report to the following e-mail address within 5 working days: service@sonnen.com.au

7.5 Commissioning Assistant 2.0

The installer is required to complete the commissioning process to ensure a correct operation of the system. During the commissioning process the installer must provide customer related information as well as set appropriate grid parameters.

The storage system is only ready for operation if the commissioning assistant is fully completed.

7.5.1 Establishing connection to the storage system

Please ensure that your commissioning device and the sonnenBatterie are both connected to the same local network.

7.5.2 Running the commissioning assistant

- Run the commissioning assistant until it is fully completed.
- The commissioning assistant must be completed to use the storage system.

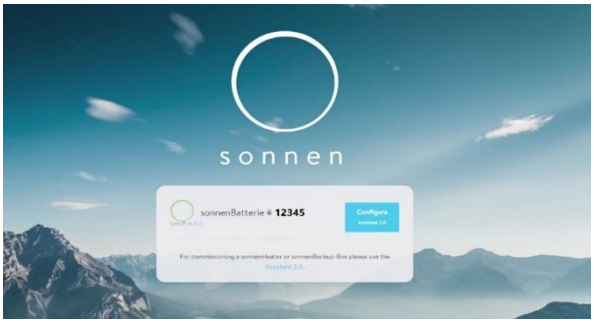

Figure 41: Identifying the storage system

1. Step

- Navigate to the following internet address: https://find-my.sonnen-batterie.com
- Select the storage system to be configured and click on the Configure Assistant 2.0 button

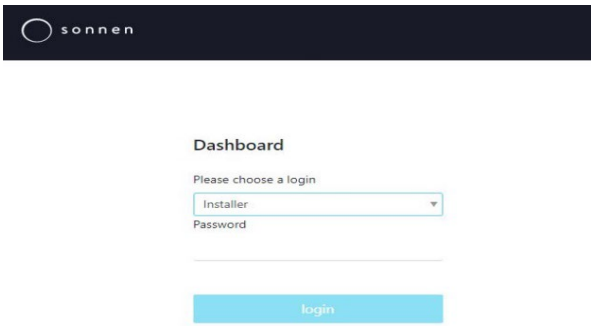

Figure 42: Logging in to the storage system as Installer

2.Step

- Log in as Installer. Use the initial password that is printed on the type label
- After a successful login you will be prompted to change the password
- In case the login fails, please contact the sonnen service team

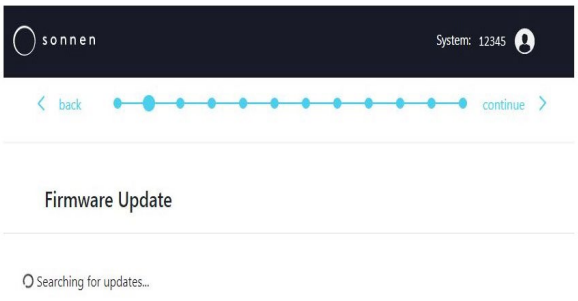

Figure 43: Firmware update

3.Step

- After a successful login the system will look for software & firmware updates
- This step can be skipped unless advised otherwise
- The system will complete the update at a later time

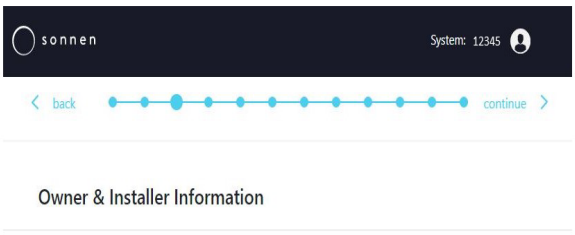

Figure 44: Setting installation details

4.Step

- Fill out the Owner, Installation, Installer & Time zone details
- Note that the installer needs to enter installer accreditation number here

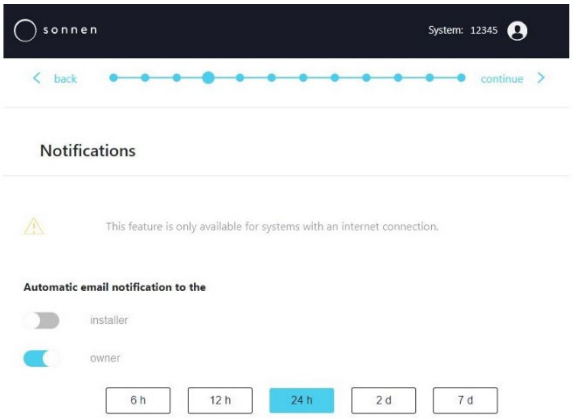

Figure 45: Notification settings

5.Step

- Select the desired notification settings
- It is recommended to enable the system owner offline notification (24h)

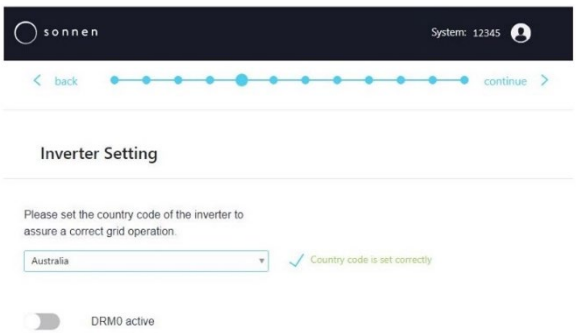

Figure 46: Inverter settings, Country code

6.Step

- For compliance with AS/NZS 4777.2:2020 please select from Australia Region A/B/C or New Zealand. Please contact your local grid operator on which region to select
- If required, adjust the relevant power quality response settings using the interface provided
- DRM0 must only be activated when a DRED device is connected

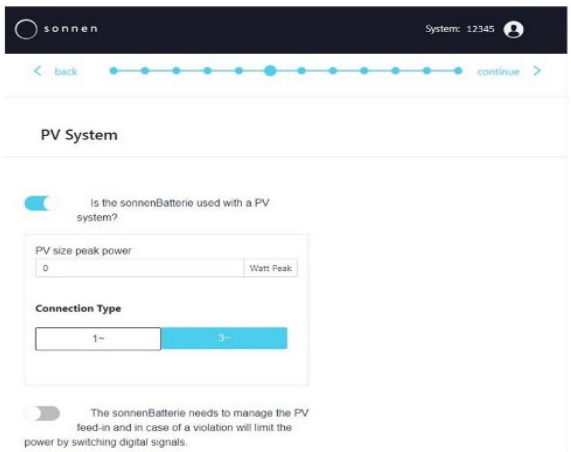

Figure 47: PV system information

7.Step

- Provide the total size of the combined PV installed on site
- Select the PV inverter connection type

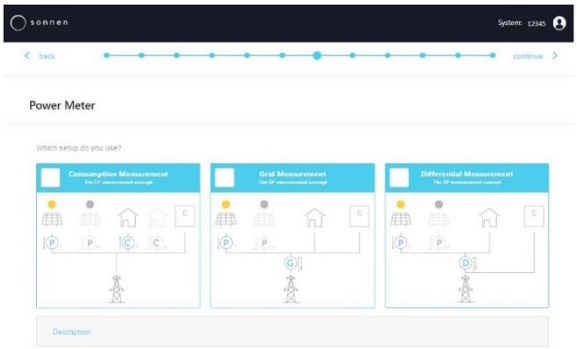

Figure 48: Power Meter setup

8.Step

- Select the applicable measurement setup depending on where the CTs are located
- Please see description for detailed information regarding the available measurement concepts

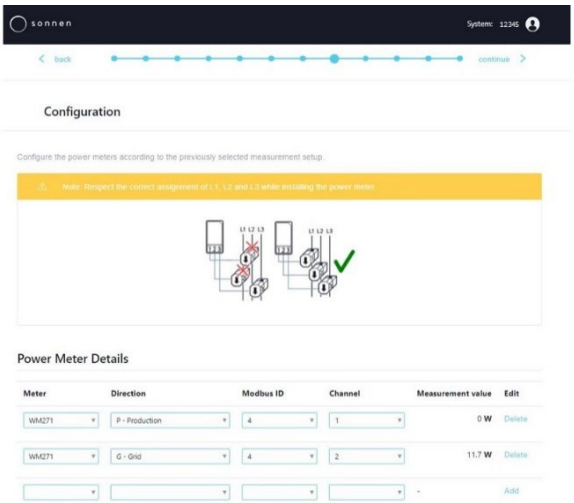

Figure 49: Meter configuration

9.Step

- Configure the meter settings as shown ONLY if they are not already set
- The default settings shall be as below:
  - Select EM271 as meter type
  - Select "Grid" for grid measurement
  - Select Modbus ID 4
  - Select channel 1
  - Select a second EM271 as meter type
  - Select "Production" for PV measurement
  - Select Modbus ID 4
  - Select channel 2
- Verify the real time measurement values are feasible

Figure 50: Operating and Backup mode

10.Step

- Select the desired operating mode, default is Self-Consumption
- Configure any additional microgrid and backup buffer settings

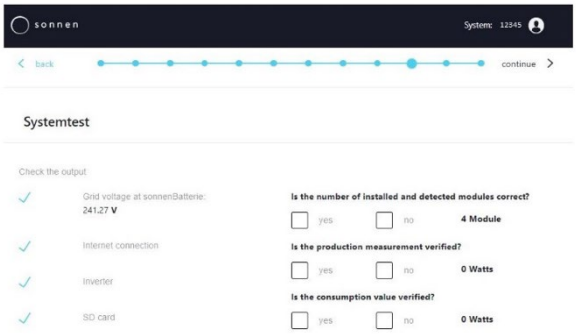

Figure 51: System test

11.Step

- Verify the system output and the parameters are correct and click "yes" or "no"

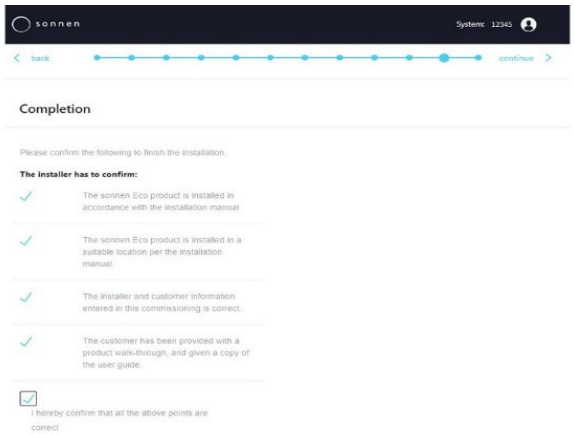

Figure 52: Completion of commissioning

12.Step

- Read and follow through with the checklist
- Check the box confirming all the points are correct

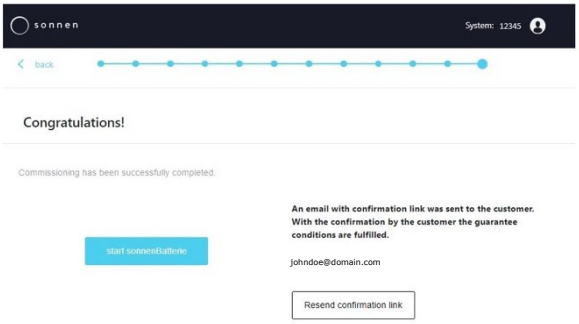

Figure 53: Start the sonnenBatterie system after successful commissioning

13.Step

- Verify the email address is correct otherwise return to the owner details step and adjust the email address

7.5.3 Multiple system operation

Testing to AS/NZS 4777.2:2020 for multiple phase combinations has not been conducted.

8 Maintenance

For fault-free, safe, reliable, and long-lasting operation of the storage system, it is essential to carry out regular function checks and cleaning.

The battery modules installed in the storage system do not require maintenance.

Interval	Actions
Every 2 weeks	▶ Check for any functional errors of the system in the portal.
Every 6 months	▶ Carefully observe the system for any visible damage ▶ Carefully listen to any abnormal noise during operation of the system ▶ Ensure the ground and the enclosure are clean and tidy ▶ Ensure the air vents at the back have a clear path for the air flow ▶ Clean the filter mat located in the base using warm water ▶ Check for any loose or damaged connections, wires, and conduit ▶ Carefully clean the outside of the storage system with a clean, moist cloth. For tougher dirt, use a small amount of household dishwashing detergent on a moist cloth.

9 Troubleshooting

Disturbance	Possible reason	Correction
No connection to the web interface of the storage system (https://find my.sonnen-batterie.com) or to the internet portal (my.sonnen.de).	No connection between the storage system and the server.	▶ Ensure the ethernet line between the storage system and the router of the home network is correctly connected. ▶ Ensure that the router of the home network allows connections on the following ports: - TCP ports: 443 (https); 18883 (MQTT- TLS) - UDP ports: 123 (NTP); 1196 (VPN)

The storage system stopped charging or discharging.	Software or hardware related issue.	▶ Restart the storage system by following the shutdown and start-up procedure in section 5. ▶ If the issue persists, contact the sonnen service
The status LED pulses orange.	The internet connection to the storage system has been interrupted.	▶ Check whether the home network router is able to establish an internet connection. If so: ▶ Ensure that the network line for the storage system is connected to the home network router.
The status LED illuminates red.	The storage system has detected a problem that is preventing normal operation or may cause damage to the storage system.	▶ Contact your installer or sonnen service team to resolve the issue.
The status LED pulses continuously green or pulses green and turns off after about 5 minutes.	The storage system is not connected to the public electricity grid.	▶ Check that the circuit breaker in the supply line of the storage system is switched on. If so: The public electricity grid does not provide any electrical energy (grid outage). ▶ The storage system will reconnect and resume normal operation once the grid becomes available.
	The storage system is not connected to the public electricity grid and is in backup operation.	No troubleshooting necessary.

10 Uninstallation & Disposal

10.1 Uninstallation

⚠ DANGER

Improper uninstallation of the storage system

Danger to life due to electrocution!

- The storage system must be only uninstalled by an authorised electrician.

10.2 Disposal

⚠ CAUTION

Improper transport of battery modules

Fire outbreak at battery modules or emission of toxic substances!

- Transport the battery modules in their original packaging only. If you no longer have the original packaging, new packaging can be requested from sonnen Australia.
- Never transport damaged battery modules.

⚠ CAUTION

Improper disposal of battery modules

Explosion or fire outbreak at battery modules or emission of toxic substances!

- Do not dispose of batteries in fire.

The storage system and the batteries it contains must not be disposed of as domestic waste!

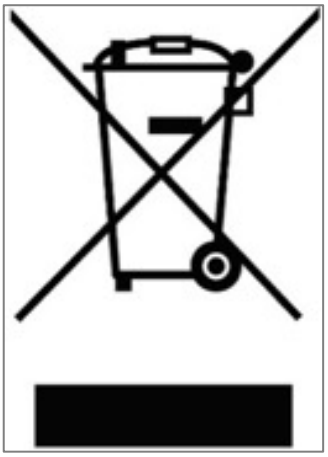

- Dispose of the storage system and the batteries it contains in an environmentally friendly way through suitable collection systems.

sonnen Australia
Tenancy 6, Lionsgate Business Park
180 Philip Highway
Elizabeth South SA 5112 Australia

P/N: 5000580- REV: 000

sonnen
energy is yours